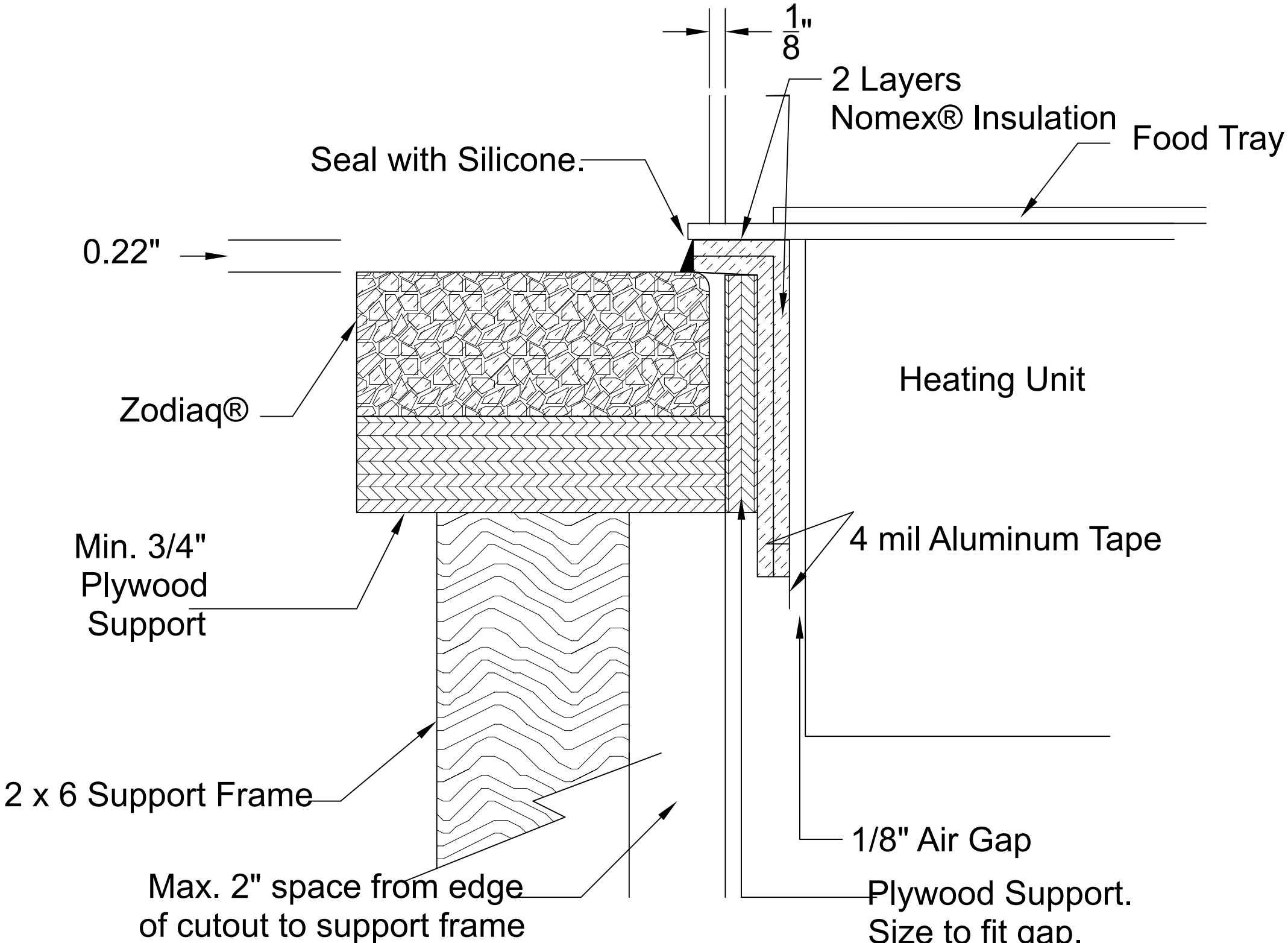
1/8"
2 Layers
Nomex® Insulation
Food Tray
Seal with Silicone.
0.22"
Zodiaq®
Heating Unit
Min. 3/4"
Plywood
Support
4 mil Aluminum Tape
2 x 6 Support Frame
1/8" Air Gap
Max. 2" space from edge
of cutout to support frame
Plywood Support.
Size to fit gap.